LATOSCANA

INSTALLATION SUBMITTAL AND DIMENSION

Serie Quadro

QU..211

Single handle lavatory faucet with lever handle.

QUCR211 Polished Chrome
QUPW211 Brushed Nickel
QUOK211 Matt Gold PVD
QUBL211 Matt Black PVD

STANDARDS

- Compliant with ASME A112.18.1 - CSA B125.1
- Compliant with ANSI/NSF 61
- Compliant with NSF 372 (Low lead)
- Certified by IAPMO R&T Lab
- Meets EPA Water Sense Certification:
  1.2gpm, 4.5L/min

FEATURES

Solid Brass Construction
Single Control Ceramic Disc Valve
Metal Pop-up assembly
1 hole installation. Optional 3-hole deckplate sold separately
Step-By-Step Installation Instructions
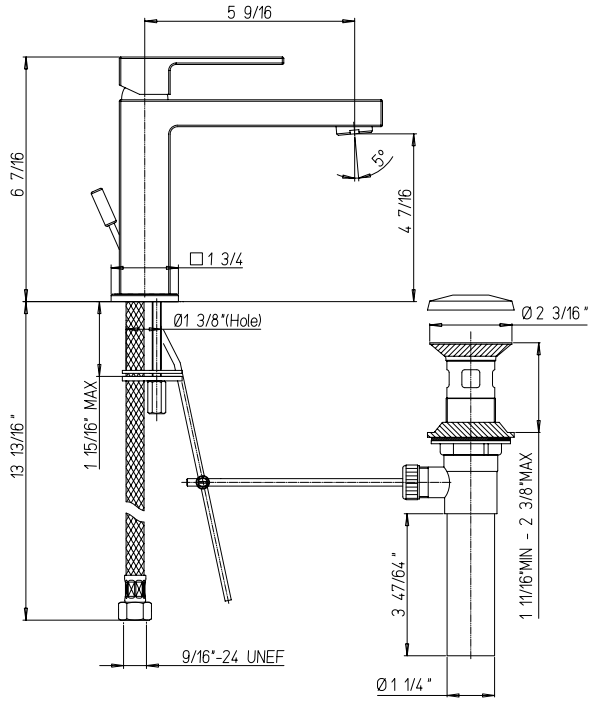
DIMENSIONS